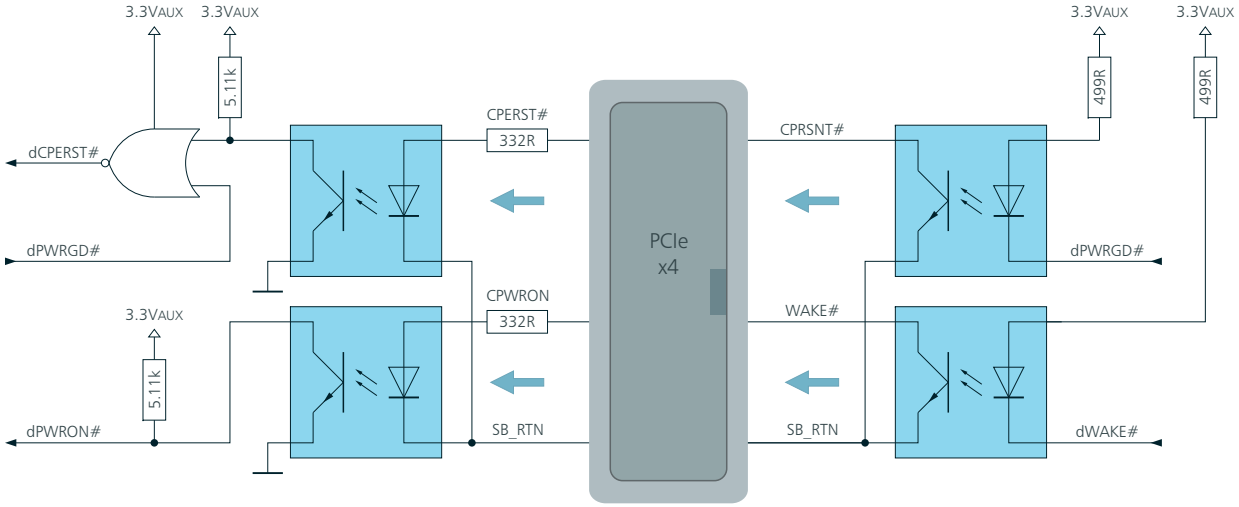Power-Domain Isolation SX* Target Adapters (Downstream Subsystem) • © EKF