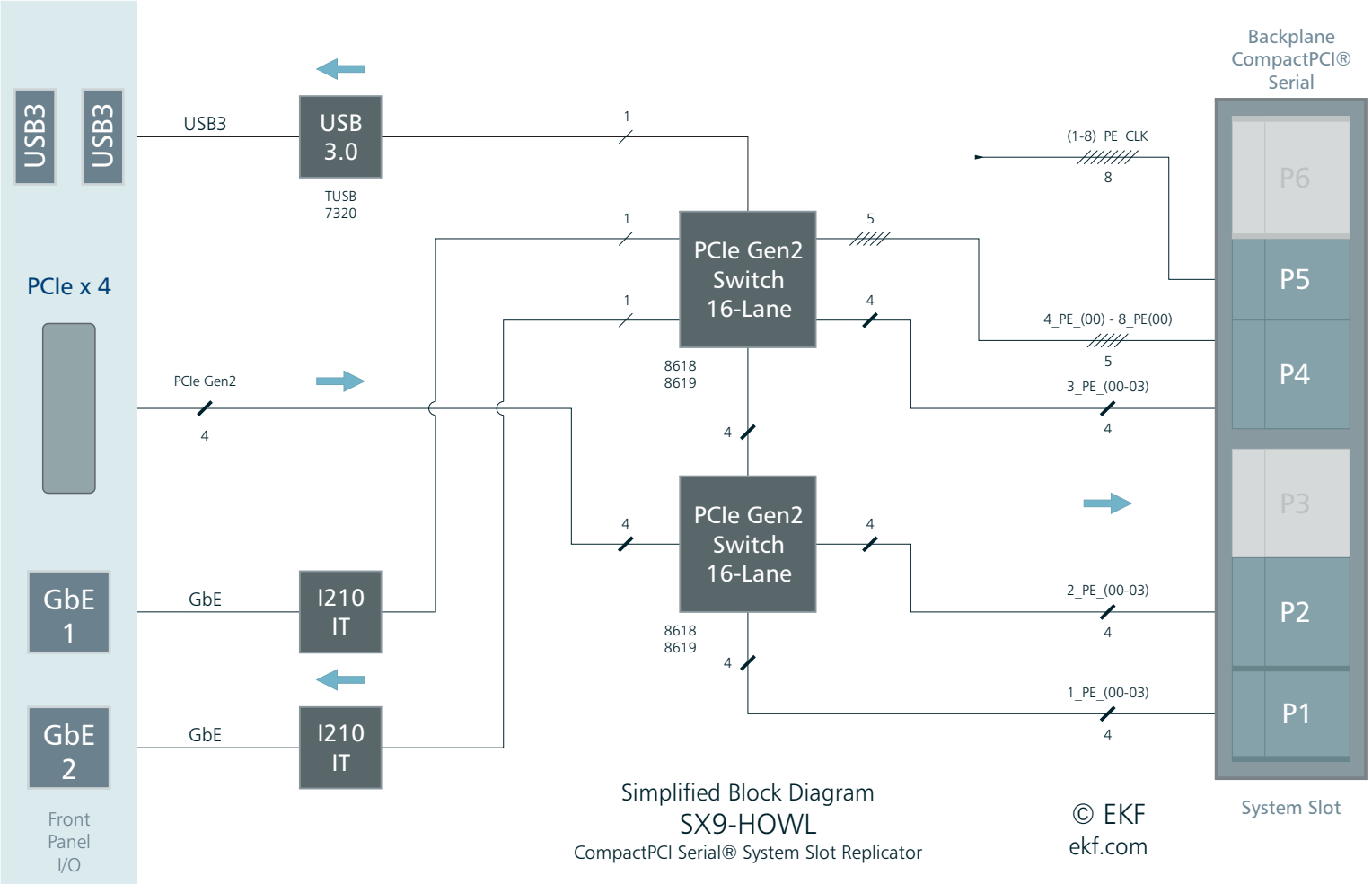

Simplified Block Diagram
SX9-HOWL
CompactPCI Serial® System Slot Replicator

© EKF
ekf.com